mondoluce

**Melbourne**
272 Toorak Rd, South Yarra VIC 3141
melbourne@mondoluce.com
03 9826 2232

**Sydney**
439 Crown St, Surry Hills NSW 2010
sydney@mondoluce.com
02 9690 2667

VI S/PLOTFRAME/4/WHITE/BLACK

# Plot Frame Pendant

by Chiaramonte & Marin

The designing principal of Plot Frame Pendant was to render a sphere of light in suspended motion. Almost hovering luminescent spheres are supported on a metallic weft, creating an exquisite and unique form. The metal cap of the lamp body acts as a heat sink for the in-built LED source and is fixed to the glass by means of a pressure system achieved by the perfect adhesion between the edge of the glass and the cap itself. Available in 3 or 4 light size with matt black metal finish and white blown glass diffusers. Hand made in Italy by Vistosi.

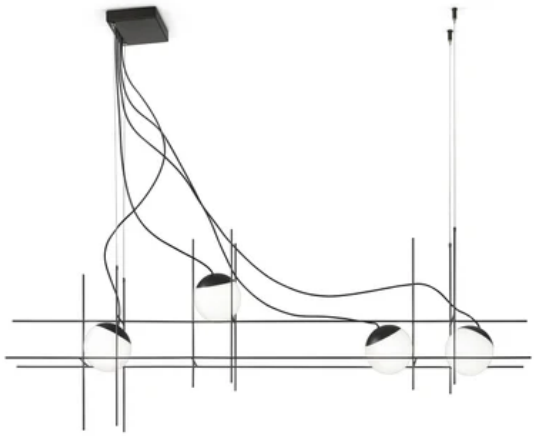

| | |
|---|---|
| **Designer** | Chiaramonte & Marin |
| **Supplier** | Vistosi |
| **Country** | Italy |
| **SKU** | VI S/PLOTFRAME/4/WHITE/BLACK |
| **Size** | 4 Light |

Product Dimensions

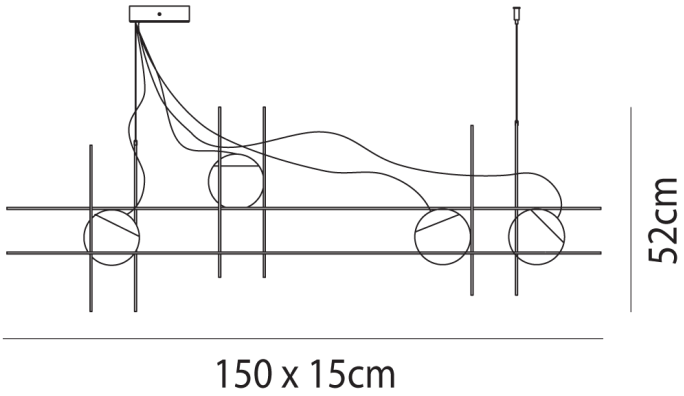


| | | | | | |
|---|---|---|---|---|---|
| **Weight** | 15kg | **Materials** | Blown glass diffusers, metal frame | **Source** | 4 x 8.5W LED |
| **Colour Temp** | 3000K | **Output** | 4800lm | **IP Rating** | IP20 |
| **Dimming** | Phase | | | | |