mondoluce

Melbourne
272 Toorak Rd, South Yarra VIC 3141
melbourne@mondoluce.com
03 9826 2232

Sydney
439 Crown St, Surry Hills NSW 2010
sydney@mondoluce.com
02 9690 2667

IC A/LUA/20/RUST/GS

Lua Wall Light

by Marco Pagnoncelli

The Lua Wall Light features an adjustable light source that is only 6mm thick. An aluminium disc with a smooth profile produces indirect lighting which enhances the Lua's deisgn. Equipped with a high efficiency LED with no driver required. Lua is available in two sizes in a variety of finish options. Made in Italy.



Designer	Marco Pagnoncelli
Supplier	Icone
Country	Italy
SKU	IC A/LUA/20/RUST/GS
Finish	Rust + Gold Silver
Size	20cm

Product Dimensions

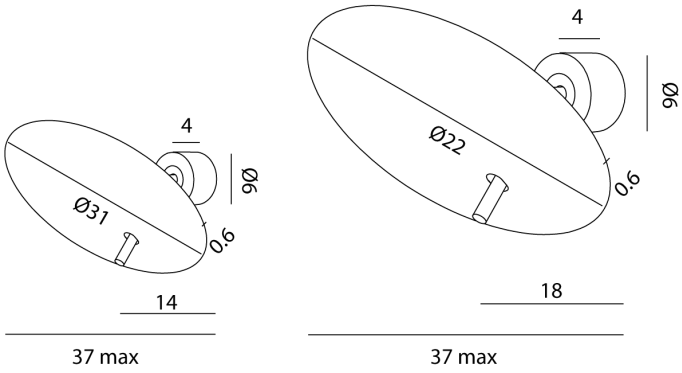

Materials	Aluminium	**Source**	20W LED	**Colour Temp**	2700K
Output	1700lm	**CRI**	90	**Emission**	Indirect
Dimming	No	**Notes**	Driver not required		