# mondoluce

**Melbourne**
272 Toorak Rd, South Yarra VIC 3141
melbourne@mondoluce.com
03 9826 2232

**Sydney**
439 Crown St, Surry Hills NSW 2010
sydney@mondoluce.com
02 9690 2667

SE S/MUMU/120/BK

## Mumu Pendant

by Keng Dian Kuo

The MUMU Pendant combines a linear metal body with natural wooden accents for clean contemporary aesthetic. MUMU minimal aesthetic is well suited for modern spaces. Available in two sizes and two finishes: matt white with beech end-caps or matt black with walnut end-caps.



| | |
|---|---|
| **Designer** | Keng Dian Kuo |
| **Supplier** | Seed Design |
| **Country** | Taiwan |
| **SKU** | SE S/MUMU/120/BK |
| **Finish** | Black |
| **Size** | 120 |

Product Dimensions

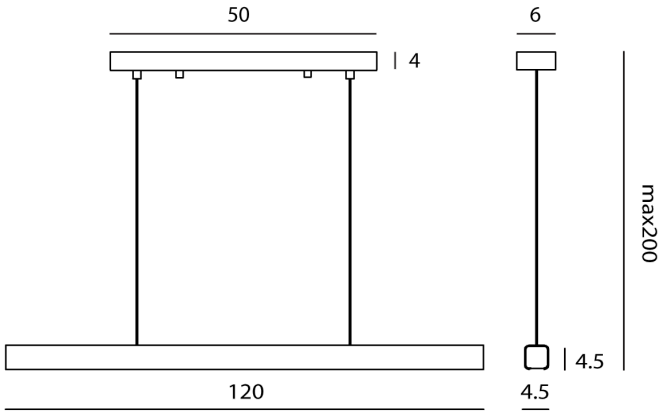


| | | | | | |
|---|---|---|---|---|---|
| **Materials** | Aluminium | **Source** | 32W LED | **Colour Temp** | 3000K |
| **Output** | 1920lm | **CRI** | 90 | **Dimming** | PHASE |