mondoluce

Melbourne
272 Toorak Rd, South Yarra VIC 3141
melbourne@mondoluce.com
03 9826 2232

Sydney
439 Crown St, Surry Hills NSW 2010
sydney@mondoluce.com
02 9690 2667

RO A/STRING/W1/9W/WHITE

String W1 Wall Lamp - White

by Dante Donegani and Giovanni Lauda

The String W1 Wall light is part of the String collection by Rotaliana. The adjustable head made with moulded plastic is easily handled and offers flexibility in positioning the direction of the light beam. The structure of the two arms is made of extruded aluminum. The movement is balanced by the elastic cable, sheathed in synthetic coloured fabric. The String also features a push sensitive dimmer that controls the light source. Includes silver, black and orange cables which are easily interchangeable for different looks.



Designer	Dante Donegani and Giovanni Lauda
Supplier	Rotaliana
Country	Italy
SKU	RO A/STRING/W1/9W/WHITE
Finish	White

Product Dimensions

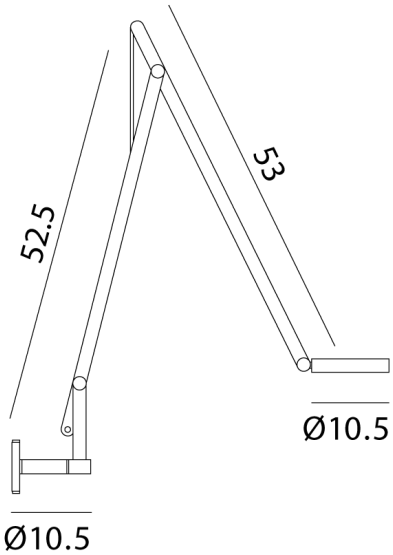

Weight	1.82kg	**Materials**	Aluminium	**Source**	9W LED
Colour Temp	2700K	**Output**	700lm	**CRI**	90
IP Rating	IP20	**Dimming**	Push button dimmer	**Notes**	Fitting includes flex cord and wall plug